Method for measuring dihedral angles of a cube-corner retroreflector having curved mirror surfaces

Nobuo Sugimoto, MEMBER SPIE
Atsushi Minato
National Institute for Environmental Studies
16-2 Onogawa
Tsukuba, Ibaraki 305 Japan
E-mail: nsugimot@nies.go.jp

Abstract. Measurement of dihedral angles of a cube-corner retroreflector with curved surfaces is discussed. A simple method for measuring a dihedral angle from an interferogram is given based on theoretical consideration. A general method to obtain three dihedral angles by means of least-squares fitting of the interference fringes is also described. The method is tested by means of simulation data.

Subject terms: cube-corner retroreflector; optical test; interferometer.

Optical Engineering 33(4), 1187–1192 (April 1994).

1 Introduction

A large aperture hollow cube-corner retroreflector with slightly curved mirror surfaces is useful as a satellite retroreflector for laser long-path absorption experiments[1] and for satellite ranging. With the use of curved mirror surfaces, the divergence of the reflected beam can be controlled to correct the velocity aberration.[1]

In the manufacturing and testing of such a retroreflector, a method for measuring dihedral angles in the corner cube is essential. A method for testing a corner cube without curved surfaces has been given by Thomas and Wyant.[2] This method may be applied to a corner cube with curved mirrors if we assume that each small portion of the mirrors can be approximated by a flat surface. However, a method including the effect of the curvature is required for accurate testing.

This paper describes a method for measuring dihedral angles of a corner cube with surfaces of small curvature. Wavefront characteristics of the reflected beam are discussed theoretically in the next section. A simple method for measuring a dihedral angle from an interferogram is presented. A general method for determining three dihedral angles from an interferogram by means of a least-squares method is given in Sec. 3.

2 Measurement of a Dihedral Angle in a Corner Cube

We consider first a retroreflector formed with three plane mirrors. We define a coordinate system as shown in Fig. 1. We assume that the dihedral angles are approximately at right angles. The differences between the right angles are defined by $\Delta\theta_x$, $\Delta\theta_y$, and $\Delta\theta_z$, as shown in Fig. 1. We assume that an interferogram is observed from the direction with a direction cosine of (α, β, γ) in the coordinate system defined in Fig. 1. The direction cosine is written in a polar coordinate system as

$$(\alpha, \beta, \gamma) = (\sin\theta \cos\phi, \sin\theta \sin\phi, \cos\theta) \ . \tag{1}$$

We consider a plane that passes the origin of the (x, y, z) system and is perpendicular to the (α, β, γ) direction, and we define a coordinate system (X, Y) as shown in Fig. 2. The direction of the Y axis is the direction of the z axis projected on the XY plane. We consider a ray of the incident beam that intersects the XY plane at (X_0, Y_0). If we denote the point (X_0, Y_0) as (x_0, y_0, z_0) in the xyz system, it can be written by:

$$\begin{aligned} x_0 &= -X_0 \sin\phi - Y_0 \cos\theta \cos\phi \ , \\ y_0 &= X_0 \cos\phi - Y_0 \cos\theta \sin\phi \ , \\ z_0 &= Y_0 \sin\theta \ . \end{aligned} \tag{2}$$

Consequently, the incident ray is written by:

$$(x - x_0)/\alpha = (y - y_0)/\beta = (z - z_0)/\gamma \ . \tag{3}$$

We denote the coordinates of the positions in which the incident ray is reflected by the x, y, and z planes by (x_1, y_1, z_1), (x_2, y_2, z_2), and (x_3, y_3, z_3). The positions of the reflections can be calculated from the intersections of the ray with the x, y, and z planes based on symmetrical consideration.[1] They can be written by:

$$\begin{aligned} x_1 &= 0 \\ y_1 &= |y_0 - (\beta/\alpha)x_0| = |X_0/\cos\phi| \\ z_1 &= |z_0 - (\gamma/\alpha)x_0| = |(\tan\phi/\tan\theta)X_0 + Y_0/\sin\theta| \end{aligned} \tag{4}$$

$$\begin{aligned} x_2 &= |x_0 - (\alpha/\beta)y_0| = |Y_0/\sin\phi| \\ y_2 &= 0 \\ z_2 &= |z_0 - (\gamma/\beta)y_0| = |-X_0/(\tan\phi \ \tan\theta) + Y_0/\sin\theta| \end{aligned} \tag{5}$$

Paper 05033 received March 2, 1993; revised manuscript received July 17, 1993; accepted for publication July 19, 1993.

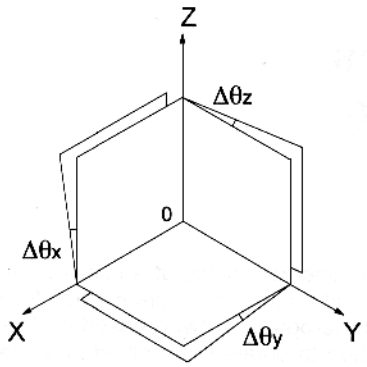

Fig. 1 Definition of dihedral angles.

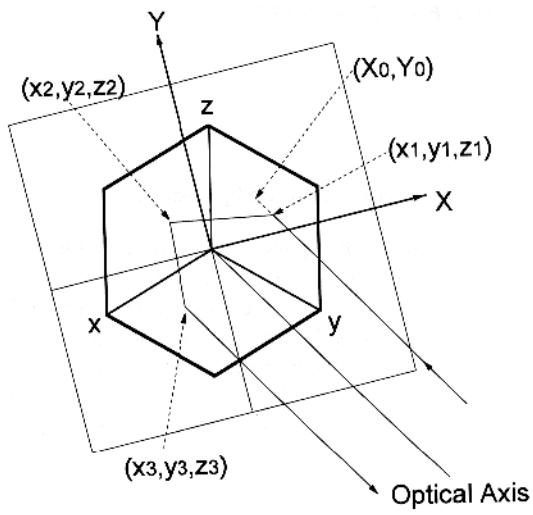

Fig. 2 Definition of the coordinate system.

$$x_3 = |x_0 - (\alpha/\gamma)z_0| = |(\sin\theta)X_0 + (\cos\phi/\cos\theta)Y_0|$$
$$y_3 = |y_0 - (\beta/\gamma)y_0| = |(\cos\phi)X_0 - (\sin\phi/\cos\theta)Y_0| \quad . \tag{6}$$
$$z_3 = 0$$

These equations can be used for all six cases of the order of the reflections by the x, y, and z planes.[1]

The position of the reflected ray is $(-X_0, -Y_0)$ for the ray incident at (X_0, Y_0) as long as dihedral angles are nearly right angles. If $\Delta\theta_x$, $\Delta\theta_y$, and $\Delta\theta_z$ are zero, the path length of the reflection does not depend on (X_0, Y_0). Consequently, the wavefront of the incident beam does not change by the reflection.

If $\Delta\theta_z$ is not zero, the reflection by the x plane causes the additional path length ΔL, which is written by the following equation:

$$\Delta L = 2\alpha\Delta\theta_z y_1 \quad . \tag{7}$$

By using Eq. (1) and Eq. (4), Eq. (7) can be written as:

$$\Delta L = 2\Delta\theta_z \sin\theta |X_0| = a|X_0| \quad , \tag{8}$$

where a is defined by:

$$a = 2\Delta\theta_z \sin\theta \quad . \tag{9}$$

Consequently, interference fringes can be described by:

$$a|X| + c_1 X + c_2 Y + c_0 = n\lambda \quad , \tag{10}$$

where the second, third, and fourth terms represent an effective change in the path length introduced by the angles and position of the reference plane. Parameter n represents the relative order of interference and λ is the wavelength of the laser used in the interferometer.

Typically, the interferogram is a fringe pattern as illustrated in Fig. 3. The dihedral angle $\Delta\theta_z$ can be obtained from the interval and the folding of the interference fringes by using Eqs. (9) and (10). If we define the gradients k_1, k_2, and the interval of the fringes as indicated in Fig. 3, $\Delta\theta_z$ can be calculated by:

$$\Delta\theta_z = \lambda(k_1 - k_2)/(4d \sin\theta) \quad . \tag{11}$$

In the general case in which $\Delta\theta_x$ and $\Delta\theta_y$ are also not zero, Eq. (7) is written by:

$$\begin{aligned}\Delta L &= 2(\alpha\Delta\theta_z y_1) + 2(\gamma\Delta\theta_y x_3) + 2(\beta\Delta\theta_x z_2) \\ &= 2\Delta\theta_z \sin\theta |X_0| \\ &\quad + 2\Delta\theta_y |\cos\theta \sin\phi X_0 + \cos\phi\ Y_0| \\ &\quad + 2\Delta\theta_x |-\cos\theta \cos\phi X_0 + \sin\phi\ Y_0| \quad .\end{aligned} \tag{12}$$

As a result, the interferogram is divided into six sections corresponding to the six cases of the signs of the arguments of the three absolute value functions. These sections also correspond to the six different orders of reflections at x, y,

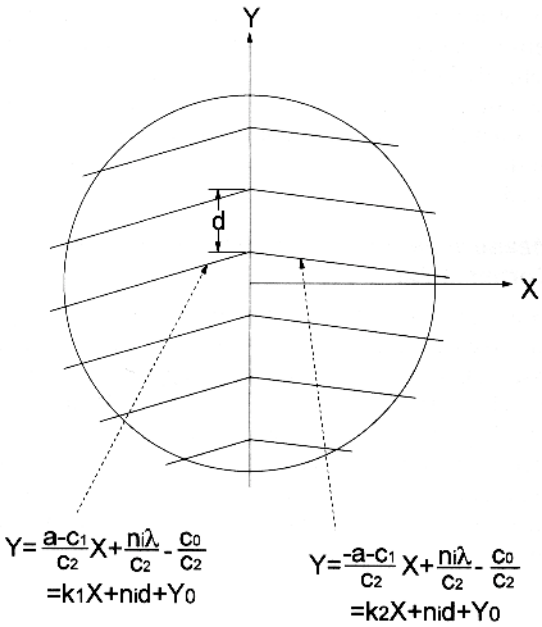

Fig. 3 Conception of the interferometric measurement of a dihedral angle.

and z mirrors. However, if we look at only a region around the positive Y axis, the arguments of the absolute value functions do not change the sign in that region, and the second and third terms can be included into the linear terms in Eq. (10). Consequently, Eq. (11) can be applied without modification.

This result is consistent with the result derived by Thomas and Wyant[2] and that described by Malacara[3] when a corner cube is viewed from the optical axis ($\sin\theta = (2/3)^{1/2}$). If we consider the limit when $\theta = 90$ deg, the equation becomes the same as that for measuring the angle between two mirrors.[3]

When curved mirror surfaces are introduced, the interference fringes become curved lines with foldings at the edges between the sections.[1] However, we can apply Eq. (11) for measuring angles between two mirrors if we approximate each portion of curved surface with a plane surface. Though the interval between fringes is not constant in this case, we can calculate an effective value by interpolation. The effective interval can be obtained by a second-order interpolation as

$$d = (d_1^2 d_2 + d_2^2 d_1)/(d_1^2 + d_2^2) \ , \tag{13}$$

where d_1 and d_2 represent the intervals between a measured fringe and fringes before and after the fringe. By using Eq. (13) and Eq. (11), we can measure local dihedral angles.

We discuss here the dependence of the dihedral angle $\Delta\theta_z$ obtained by Eq. (11) on the angle θ. In actual measurements, an error in θ will induce an error in the obtained dihedral angle. An error in $\Delta\theta_z$ can be estimated with the following equation that is obtained from Eq. (11) by partially differentiating $\Delta\theta_z$ with respect to θ:

$$\delta(\Delta\theta_z)/\Delta\theta_z = -(\cos\theta/\sin\theta)\delta\theta = -0.71 \ \delta\theta \ . \tag{14}$$

By using this equation, the error in $\Delta\theta_z$ is estimated at approximately 1.2% when the error in θ is 1 deg (0.017 rad). We may conclude that the measurement of $\Delta\theta_z$ is not very sensitive to the error in θ.

The method described above can be applied also to double-pass measurements using a folding mirror,[3] which is illustrated in Figs. 4(a) and 4(b). The folding mirror is placed at the symmetrical position with regard to the center of the retroreflector. The double-pass method is useful for measuring a large aperture retroreflector with a small aperture interferometer. In this case, the equation for the dihedral angle is

$$\Delta\theta_z = \lambda(k_1 - k_2)/(8d \ \sin\theta) \ . \tag{15}$$

Figure 5 shows an example of a simulated double-pass interferogram with a 6-in. aperture interferometer. In this example, the x plane has a curvature with a radius of curvature of 13,900 m. The angle $\Delta\theta_z$ obtained with Eq. (15) is 6.9 μrad. The true value of $\Delta\theta_z$ given in the simulation is 6.5 μrad. Error in the measurement is 0.4 μrad in this example. The error is mainly caused in the measurement of the gradients of the fringes at the edge. We describe a more accurate method in the following section—a method that utilizes the whole aperture of an interferogram.

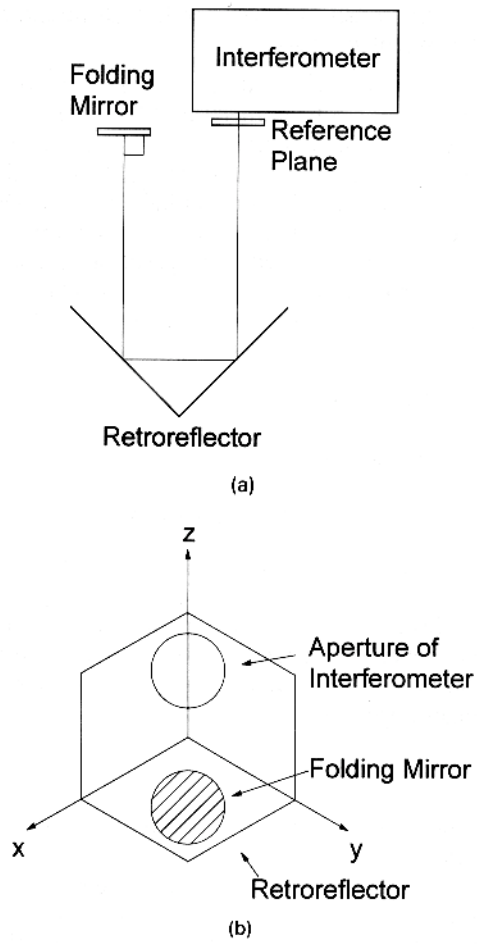

Fig. 4 Illustration of double pass method: (a) optical setup and (b) geometry with regard to the corner cube.

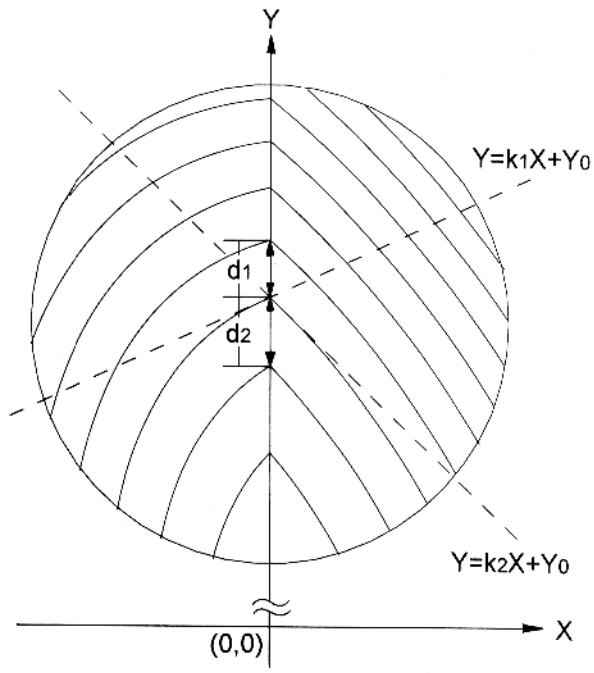

Fig. 5 Simulated double pass interferogram of a corner cube with a curved surface.

3 Least-Squares Method for the Determination of Dihedral Angles

In our previous paper[1] we discussed the wavefront of the reflected beam of a cube-corner retroreflector that had spherical surfaces with small curvatures. It has been shown that when dihedral angles at the center are right angles, the wavefront can be expressed by a quadratic equation. The effect of the spoiled dihedral angles can be treated separately and the contribution can be added to the wavefront. Consequently, the path length of the reflection by a corner cube with spherical surfaces as a function of the position (X,Y) of the incident ray is:

$$\begin{aligned}\Delta L(X,Y) = {} & 2\Delta\theta_z \sin\theta |X| \\ & + 2\Delta\theta_y |\cos\theta \ \sin\phi X + \cos\phi Y| \\ & + 2\Delta\theta_x |-\cos\theta \ \cos\phi X + \sin\phi Y| \\ & + d_{11}X^2 + d_{12}XY + d_{22}Y^2 \ , \end{aligned} \tag{16}$$

where angles $\Delta\theta_x$, $\Delta\theta_y$, and $\Delta\theta_z$ are defined at the center of the corner cube. The quadratic terms represent the effect of curved surfaces. Consequently, the condition that interference fringes appear is:

$$\Delta L(X,Y) + c_1 X + c_2 Y + c_0 = n\lambda \ . \tag{17}$$

The second, third, and fourth terms represent the effective path length introduced by the angles and the position of the reference plane. Parameter n represents the relative order of interference and λ is the wavelength of the laser.

If the coordinates and the relative order (X_i, Y_i, n_i) are measured for multiple points on the interference fringes, the parameters $\Delta\theta_x$, $\Delta\theta_y$, $\Delta\theta_z$, d_{11}, d_{12}, d_{22}, c_1, c_2, and c_0 can be determined by minimizing the following function:

$$\begin{aligned} & f(\Delta\theta_x, \Delta\theta_y, \Delta\theta_z, d_{11}, d_{12}, d_{22}, c_1, c_2, c_0) = \\ & \quad \textstyle\sum_i [\Delta L(X_i,Y_i) + c_1 X_i + c_2 Y_i + c_0 - n_i\lambda]^2 \ . \end{aligned} \tag{18}$$

Though the parameters representing the effect of curved mirrors are also determined simultaneously, the contribution of each mirror cannot be assigned.

We have written a simple computer program for calculating $\Delta\theta_x$, $\Delta\theta_y$, and $\Delta\theta_z$ based on this method. The program is given in Appendix A. The Cholesky Method[4] is used for least-squares determination.

The program is written so that it also can be applied to double-pass measurements. In the double-pass method, an interferogram is measured in a region that contains only a single edge between mirrors. For the measurement illustrated in Fig. 4(b), Eq. (18) can be replaced by:

$$\begin{aligned} & f(\Delta\theta_z, d_{11}, d_{12}, d_{22}, c_1, c_2, c_0) = \\ & \quad \textstyle\sum_i \{\Delta L'(X_i,Y_i) + c_1' X_i + c_2' Y_i + c_0 - n_i\lambda\}^2 \ . \end{aligned} \tag{19}$$

The path length $\Delta L'(X,Y)$ is given by:

$$\Delta L'(X,Y) = 2\{2\Delta\theta_z \ \sin\theta |X| + d_{11}X^2 + d_{12}XY + d_{22}Y^2\} \ . \tag{20}$$

We tested the program using simulated interferograms calculated for a retroreflector having a spherical surface with a radius of curvature of 13,900 m. The parameters are the same as those for the Retroreflector In Space that is described in our previous paper.[1]

Figure 6 shows a simulated interferogram for the measurement at the central portion with an interferometer with a clear aperture of 6 in. Samples were taken at the 32 points indicated in Fig. 6. The three dihedral angles $\Delta\theta_x$, $\Delta\theta_y$, and $\Delta\theta_z$ calculated by the least-squares program are 6.4, 6.3, and 0.1 μrad. The true values are 6.5, 6.5, and 0 μrad. The error is approximately 0.1 μrad. The error is probably caused by the errors in measuring coordinates of sample points. Consequently, the error in the angles obtained depends on the number of sampling points. The dependence was investigated by means of a simulation program. The results are listed in Table 1. The standard deviations of the dihedral angles were calculated for each case by means of 100 sets of sample point data that were generated including random errors in the X and Y coordinates. The results show that errors in dihedral angles depend on the number of sampling points when errors are contained in the measurement. The result also shows that an accuracy of 0.5 μrad can be easily achieved by this method. The preceding method can also be applied to conventional retroreflectors formed with plane mirrors without modification.

4 Conclusion

A method for measuring the dihedral angles of a cube-corner retroreflector that has curved surfaces was presented. It was shown that a least-squares method is useful for determining the three dihedral angles. The method described was developed for the tests of the Retroreflector In Space (RIS).[1] Experimental work on the optical characteristics of the RIS will be reported elsewhere.

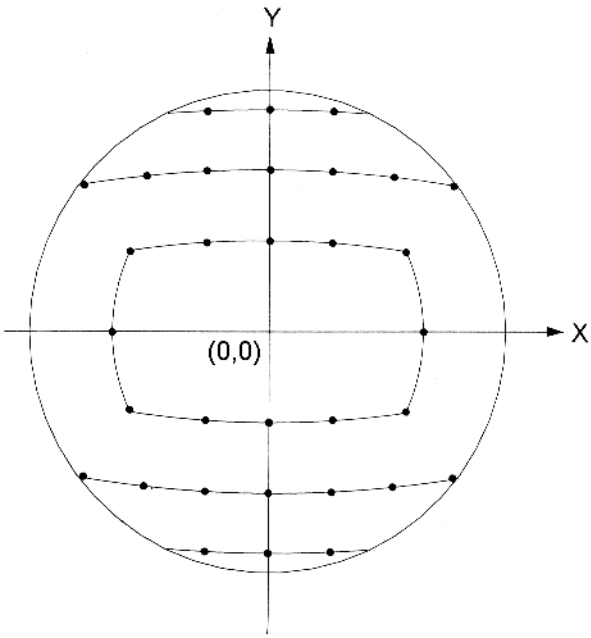

Fig. 6 Simulated interferogram. Points indicated were sampled for the least-squares fitting.

Table 1 Results of the simulation including measurement errors.

num. of sample points	20	182	45	20
s.d.* of Xi and Yi (mm)	0	1	1	1
$\Delta\theta x$ (μr)	6.51	6.58	6.65	6.68
s.d. of $\Delta\theta x$	0	0.21	0.36	0.58
$\Delta\theta y$	6.51	6.57	6.65	6.74
s.d. of $\Delta\theta y$	0	0.23	0.42	0.56
$\Delta\theta_z$	0	0.03	0.09	0.13
s.d. of $\Delta\theta_z$	0	0.19	0.41	0.48

* s.d. standard deviation

5 Appendix A

The BASIC program for least-squares determination of dihedral angles is as follows.

```
10 REM determination of dihedral angles by least squares fitting
   (Cholesky Method)
20 DIM SP(50,50),GX(10)
30 REM direction cosine
40 ALF=1/SQR(3):REM direction of (111) axis
50 BET=1/SQR(3)
60 GAM=1/SQR(3)
70 CTH=GAM
80 STH=SQR(1!-GAM^2)
90 CPH=ALF/STH
100 SPH=BET/STH
110 ISW=1:REM ISW=1;single pass, ISW=2;double pass
120 REM read M; number of sample points
130 READ M
140 IF ISW=1 THEN N=9 ELSE N=7
150 FOR I=1 TO N+1
160 FOR J=1 TO N+1
170 SP(I,J)=0
180 NEXT J
190 NEXT I
200 FOR K=1 TO M
210 READ LXI,LYI,NI:REM read data (LXI,LYI,NI)
220 X0I=0-(LXI*SPH+LYI*CTH*CPH):REM equation (2) in the text
230 Y0I=(LXI*CPH-LYI*CTH*SPH)
240 Z0I=LYI*STH
250 Z2I=ABS(Z0I-Y0I*GAM/BET):REM equation (5) in the text
260 X3I=ABS(X0I-Z0I*ALF/GAM):REM equation (6) in the text
270 Y1I=ABS(Y0I-X0I*BET/ALF):REM equation (4) in the text
280 IF ISW=2 GOTO 400
290 GX(1)=BET*Z2I*2!:REM delta theta x term
300 GX(2)=GAM*X3I*2!:REM delta theta y term
310 GX(3)=ALF*Y1I*2!:REM delta theta z term
320 GX(4)=LXI^2:REM d11 term
330 GX(5)=LYI^2:REM d22 term
340 GX(6)=LXI*LYI:REM d12 term
350 GX(7)=LXI:REM c1 term
360 GX(8)=LYI:REM c2 term
370 GX(9)=1!:REM c0 term
380 GX(10)=NI*6.328E-07:REM n lambda
390 GOTO 490
400 REM
410 GX(1)=ALF*Y1I*2!*2!:REM double pass
420 GX(2)=LXI^2
430 GX(3)=LYI^2
440 GX(4)=LXI*LYI
450 GX(5)=LXI
460 GX(6)=LYI
470 GX(7)=1!
480 GX(8)=NI*6.328E-07
490 REM
500 FOR I=1 TO N+1
510 FOR J=1 TO N+1
520 SP(I,J)=SP(I,J)+GX(I)*GX(J)
530 NEXT J
540 NEXT I
550 NEXT K
560 FOR I=1 TO N
570 SP(N+1,I)=SP(I,N+1)
580 NEXT I
590 DET =1
600 FOR I=1 TO N
610 S=0
620 FOR K=1 TO I-1
630 S=S+SP(K,I)^2
640 NEXT K
650 D=SP(I,I)-S
660 DET=DET*D
670 SP(I,I)=SQR(D)
680 FOR J=I+1 TO N+1
690 S=0
700 FOR K=1 TO I-1
710 S=S+SP(K,I)*SP(K,J)
720 NEXT K
```

```
730 SP(I,J)=(SP(I,J)-S)/SP(I,I)
740 NEXT J
750 NEXT I
760 FOR I=N TO 1 STEP -1
770 S=0
780 FOR K=I+1 TO N
790 S=S+SP(I,K)*SP(K,N+1)
800 NEXT K
810 SP(I,N+1)=(SP(I,N+1)-S)/SP(I,I)
820 NEXT I
830 FOR I=1 TO N
840 PRINT I,SP(I,N+1)
850 NEXT I
860 END
1000 DATA 20
1010 DATA 0.002,0.213,1
1020 DATA 0.032,0.243,1
.....
1200 DATA 0.214,0.045,5
```


Acknowledgment

The authors would like to thank Zvi Bleier of PLX, Inc. for useful discussions.

References

1. A. Minato, N. Sugimoto, and Y. Sasano, "Optical design of cube-corner retroreflectors having curved mirror surfaces," *Appl. Opt.* **31,** 6015–6020 (1992).
2. D. A. Thomas and J. C. Wyant, "Determination of the dihedral angle errors of a corner cube from its Twyman-Green interferogram," *J. Opt. Soc. Am.* **67,** 467–472 (1977).
3. D. Malacara, Ed., *Optical Shop Testing,* pp. 30–34, pp. 59–61, John Wiley & Sons, New York (1978).
4. C. L. Lawson and R. J. Hanson, *Solving Least Squares Problems,* pp. 121–133, Prentice Hall, Inc., Englewood Cliffs, New Jersey (1974).

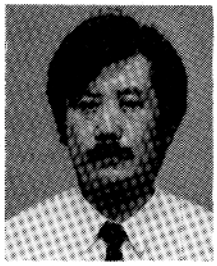

Nobuo Sugimoto received his BEng and MEng degrees from Osaka University, Japan, in 1976 and 1978, respectively, in material physics. He joined the National Institute for Environmental Studies (NIES) in 1979. He has studied laser spectroscopy and lidar methods for measuring atmospheric trace gases. He received his DrSc from the University of Tokyo, Japan, in 1985. At NIES, he has developed various lidar systems and laser long-path absorption systems for atmospheric measurements. He was a postdoctoral fellow at the University of South Florida in 1988 and 1989. Currently, he is the head of the Upper-Atmospheric Environment Section in the Atmospheric Environment Division of NIES. He is also the leader of the science team for the earth-satellite-earth laser long-path absorption experiment using the Retroreflector In Space (RIS). He is a member of the Japan Society of Applied Physics, OSA, IEEE, and SPIE.

Atsushi Minato studied seismology (earthquake) and received his BSc degree in geophysics from Kyoto University, Japan, in 1984. He worked for Hitach Koki Corporation from 1984 to 1985. He studied statistical thermodynamics of InGaAsP semiconductor in the master course of the University of Tokyo under the leadership of Prof. Ryoich Ito and received his MEng degree in applied physics in 1988. He has been a research scientist in the National Institute for Environmental Studies (NIES) since 1988. He has been studying laser long-path absorption measurements of atmospheric trace species, especially on earth-satellite-earth measurements using the Retroreflector In Space (RIS). He is completing his DrEng research in this field. Minato is a member of the Japan Society of Applied Physics and OSA.